Published: 11-May-2011

Front Suspension - Shock Absorber and Spring Assembly

Removal and Installation

Removal

• NOTE: Vehicles with high performance brakes have a damper fitted to the top of each front suspension air spring. The damper is secured with high strength thread adhesive and must be replaced if the air spring is renewed.

1. WARNING: Do not work on or under a vehicle supported only by a jack. Always support the vehicle on safety stands.

   Raise and support the vehicle.

2. Remove the front road wheel.
3. Using the Land Rover approved diagnostic system, depressurize the air suspension.
   For additional information, refer to: Air Suspension System Depressurize and Pressurize (204-05 Vehicle Dynamic Suspension, General Procedures).
4. Release the ABS sensor lead and brake line.
   - Release from the 3 clips.
5. LH side: Release the brake pad wear sensor lead.
   - Release from the clip.

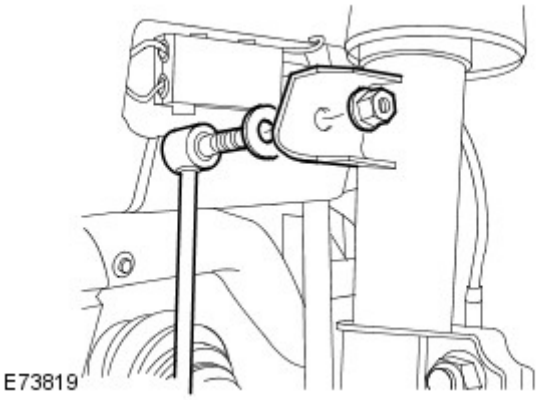

6. CAUTION: Note the fitted position of the special washer.

   • NOTE: Use an additional wrench to prevent the ball joint rotating.

   Release the stabilizer bar link.

   - Remove the nut.

7. WARNING: Use a jack to support the hub and lower arm.

   Release the hub from the air suspension spring.

   - Remove the 2 nuts and 2 bolts.
   - Lower the jack.

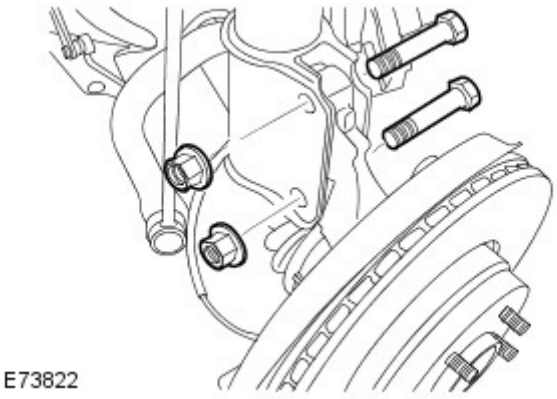
E73822

8. Mark the fitted position of the stud to aid assembly.

- Remove the nut.

9. CAUTIONS:

Lower the air suspension spring sufficiently to release the air line connection.

Do not allow the brake caliper to hang on the brake hose.

• NOTE: Models with standard brakes shown, models with high performance brakes similar.

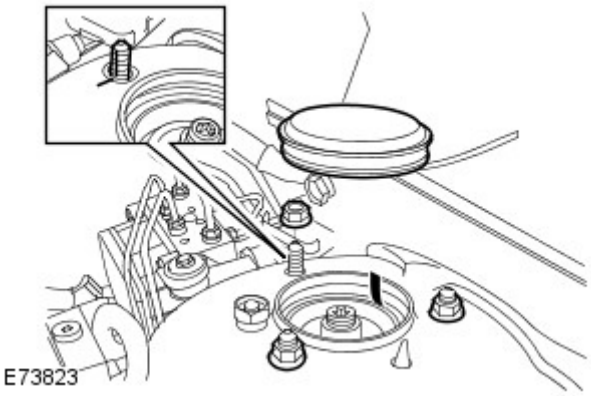
E73823

Release the air suspension spring.

- Remove the cap.
- Remove the 2 remaining nuts.

10. CAUTION: Before disconnecting or removing the components, ensure the area around the joint faces and connections are clean and dry. Plug open connections to prevent contamination.

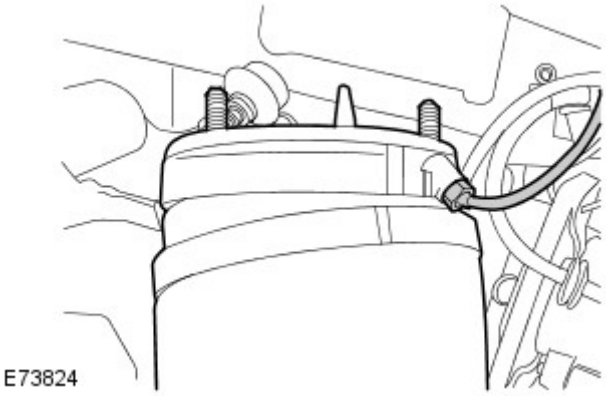
E73824

Remove the air suspension spring.

- Disconnect the air line.
- Remove and discard the gasket.

Installation

1. CAUTIONS:

Make sure the tag on the gasket is visible.

The final tightening of the shock absorber and spring assembly retaining nuts must be carried out with the vehicle on its wheels.

• NOTE: If installing a new air suspension spring, remove the air line union.

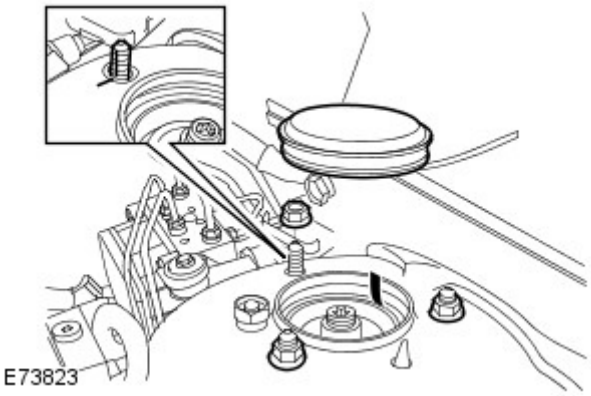

• NOTE: Align stud to mark made on removal.

• NOTE: Models with standard brakes shown, models with high performance brakes similar.

Install the air suspension spring.

- Clean the component mating faces.
- Install a new gasket.
- Install the air line but do not tighten the union fully at this stage.
- Tighten the nuts to 56 Nm (41 lb.ft).

2. Tighten the air line union to 3.5 Nm (2.6 lb.ft).

3. Connect the hub to the air suspension spring.

- Clean the component mating faces.
- Fit bolts and tighten nuts to 250 Nm (184 lb.ft).

4. CAUTION: The washer is hardened and must be fitted in the correct position.

• NOTE: Use an additional wrench to prevent the component from rotating.

Connect the stabilizer link.

- Install the special washer.
- Tighten the nut to 100 Nm (74 lb.ft).

5. Secure ABS sensor lead and brake line.

- Secure into the 3 clips.

6. LH side: Secure the brake pad wear sensor lead.

- Secure in the clip.

7. Vehicles with high performance brakes: Install a new damper.

- Clean the component mating faces.
- Apply a 3 mm bead of high strength retainer STC 50554 to the thread.
- Tighten to 20 Nm (15 lb.ft).
- Install the cap.

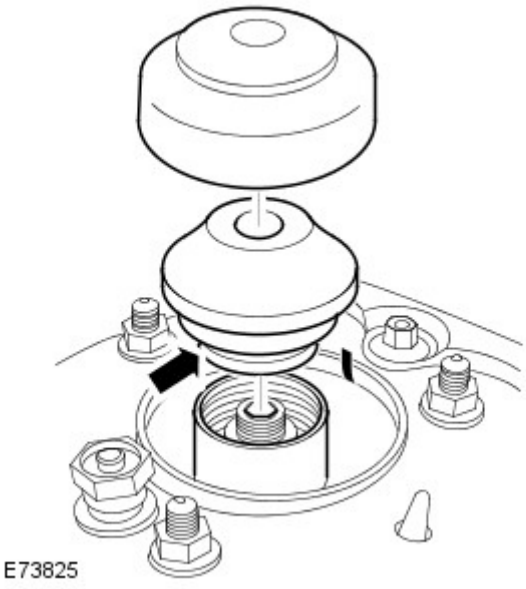

8. CAUTION: The air springs must be fully pressurised

before the weight of the vehicle is applied to them.

Using the Land Rover approved diagnostic system, pressurize the air suspension.
For additional information, refer to: Air Suspension System Depressurize and Pressurize (204-05 Vehicle Dynamic Suspension, General Procedures).

9. Install the road wheel.

- Tighten nuts to 140 Nm (103 lb.ft).

10. Check, and if necessary, adjust the wheel alignment.